REVISION				
REV	ECN NO.	DESCRIPTION	DATE	APPROVED

NOTES:
1. FOR A C.W. ROTATION, AS VIEWED FROM LEAD END, ENERGIZE PER EXCITATION SEQUENCE TABLE.
2. MINIMUM HOUSING SHOULDER Ø251,71mm, BOTH SIDES.
3. MOTOR SHIPPED AS SHOWN WITH AIRGAP SPACERS INSTALLED.
4. REFER TO KOLLMORGEN FRAMELESS MOTOR INSTALLATION GUIDE FOR MOUNTING INSTRUCTIONS.
5. ADHESIVE BACKED NAMEPLATE SUPPLIED WITH MOTOR. CUSTOMER TO INSTALL NAMEPLATE ON MACHINE NEAR MOTOR FOR U.L. COMPLIANCE.

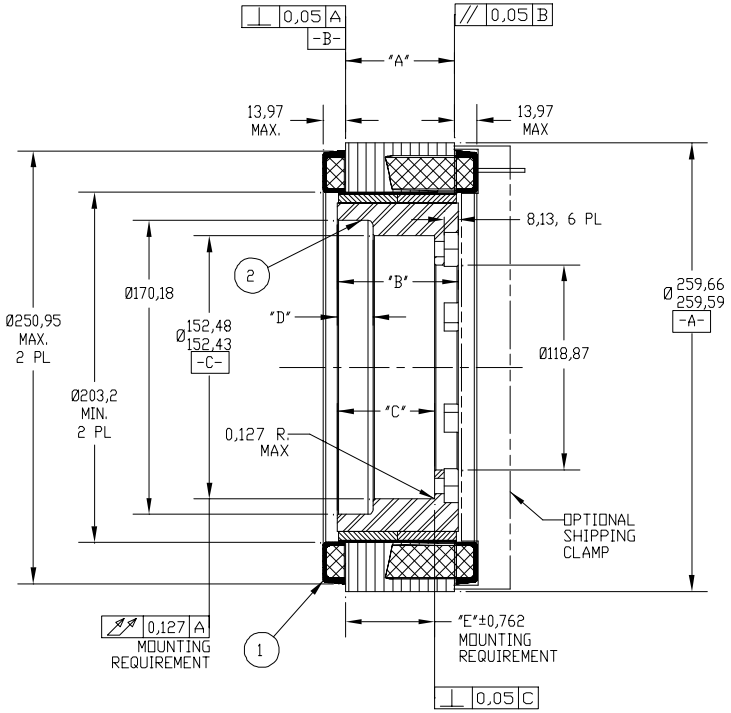

SECTION A-A

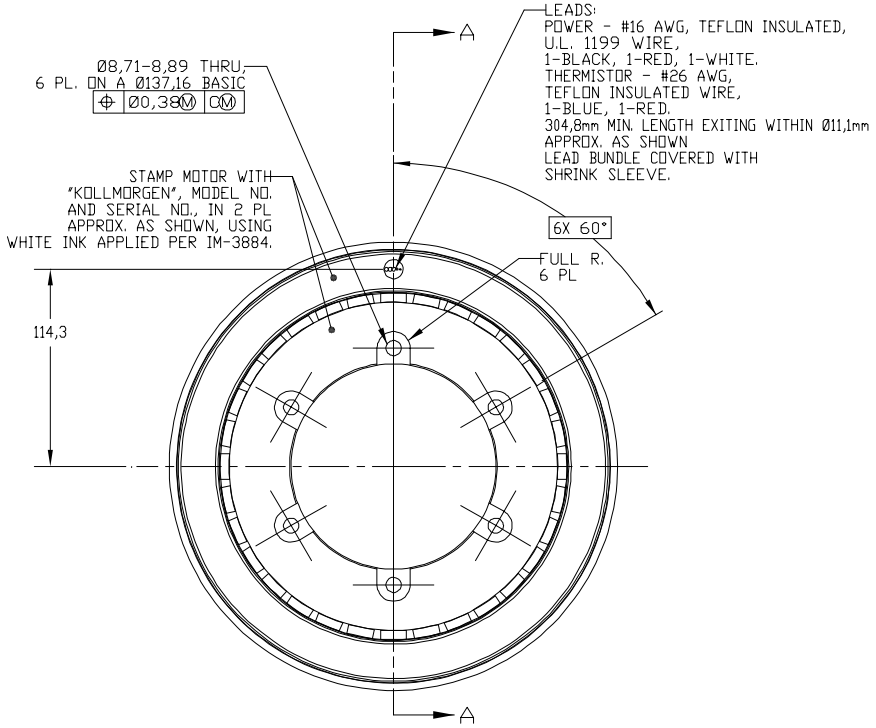

	POWER CONNECTOR		
STEP	PIN "3"	PIN "4"	PIN "1"
1	⊕	⊖	
2	⊕		⊖
3		⊕	⊖
4	⊖	⊕	
5	⊖		⊕
6		⊖	⊕

EXCITATION SEQUENCE TABLE

TABLE 1

MODEL NUMBER	F/FH7913	F/FH7925	F/FH7950
DIM "A"	31,75 30,73	63,5 62,48	127,0 125,98
DIM "B"	38,61	70,36	133,86
DIM "C"	24,89	56,64	120,14
DIM "D"	15,24	20,83	20,83
DIM "E"	20,96	52,71	116,21
FIELD ASSY	C-920125	C-920126	C-920127
FIELD ASSY (W/SHIPPING CLAMP)	923167-13	923167-25	923167-50
ARMATURE ASSY (480 VAC)	C-920818-7913-X	C-920818-7925-X	C-920818-7950-X
ARMATURE ASSY (230 VAC)	C-920815-7913-X	C-920815-7925-X	C-920815-7950-X

WARNING:
FIELD ASSEMBLY HAS HIGH ENERGY MAGNETS.
LEAVE AIRGAP SPACERS IN PLACE UNTIL MOTOR IS MOUNTED.
IF FIELD ASSEMBLY IS REMOVED FROM ARMATURE, USE EXTREME CAUTION WHEN HANDLING AND RE-ASSEMBLING. PART DAMAGE AND BODILY INJURY MAY OCCUR.

ITEM	QTY	IDENTIFYING NUMBER	DESCRIPTION
2	1	SEE TABLE	FIELD ASSEMBLY (MIDDLE STACK)
1	1	SEE TABLE	ARMATURE ASSEMBLY (MIDDLE STACK)

LIST OF PARTS

Pro/Engineer Drawing	
Pro/E Model File Rev	
Pro/E Model File	DDR_10X_ARMATURE_FIELD
Pro/E Drawing Name	920811
Pro/E Model Type	ASSEM

UNLESS OTHERWISE SPECIFIED:
REMOVE ALL SHARP BURRS AND BREAK ALL SHARP EDGES
XX DECIMAL PLACES ±0,38
XXX DECIMAL PLACES ±0,13
ANGULAR DIMENSIONS ±1°

DO NOT SCALE DRAWING
USE DIMENSIONS ONLY
ALL DIMENSIONS ARE IN MM

INTERPRET GEOMETRIC SYMBOLS PER ANSI Y14.5M-1982

DRAWN BY: KLR DATE: 12-Nov-01
CHECKED BY:
APPROVED BY:

KOLLMORGEN
GOLDLINE DDR
RADFORD, VIRGINIA
1-800-77SERVO (1-800-777-3786)

OUTLINE
F/FH79XX

FSCM	SIZE	DWG. NO.	REV
11384	C	920811_MM	A

SCALE: 1:2 | JOB NO.: | SHEET 1 OF 1

REV: A
DWG NO. 920811