NOTES:
1. FOR A C.W. ROTATION, AS VIEWED FROM LEAD END, ENERGIZE PER EXCITATION SEQUENCE TABLE.
2. MINIMUM HOUSING SHOULDER Ø196,85mm, BOTH SIDES.
   MAXIMUM SHAFT SHOULDER Ø134,11mm, BOTH SIDES.
3. MOTOR SHIPPED WITH AIRGAP SPACERS INSTALLED.
4. REFER TO KOLLMORGEN FRAMELESS MOTOR INSTALLATION GUIDE FOR MOUNTING INSTRUCTIONS.
5. ADHESIVE BACKED NAMEPLATE SUPPLIED WITH MOTOR. CUSTOMER TO INSTALL NAMEPLATE ON MACHINE NEAR MOTOR FOR U.L. COMPLIANCE.

REVISION				
REV	ECN NO.	DESCRIPTION	DATE	APPROVED

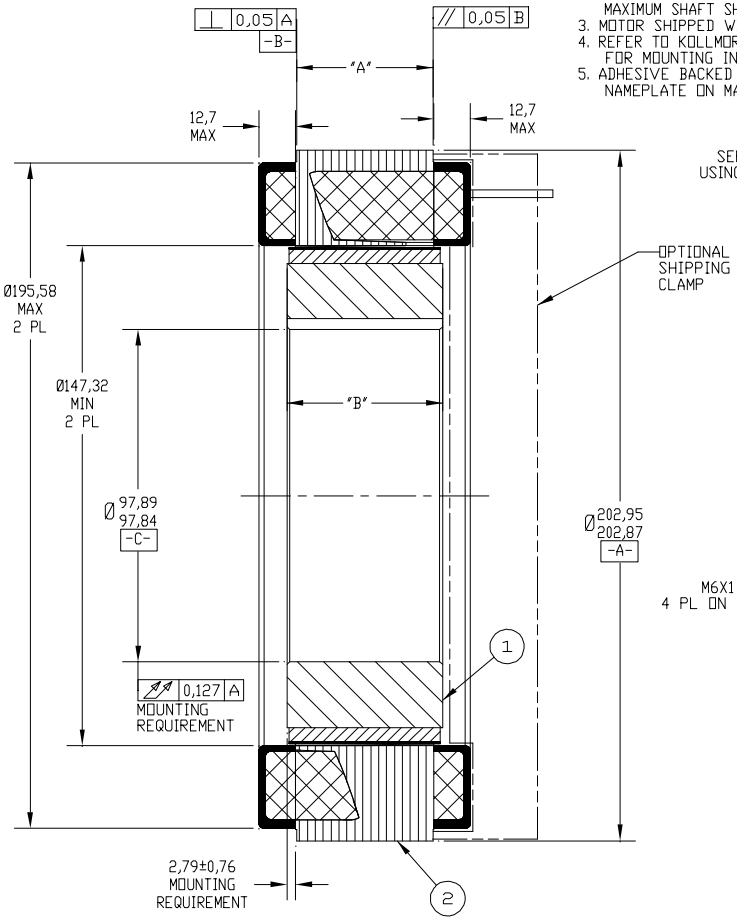

SECTION A-A

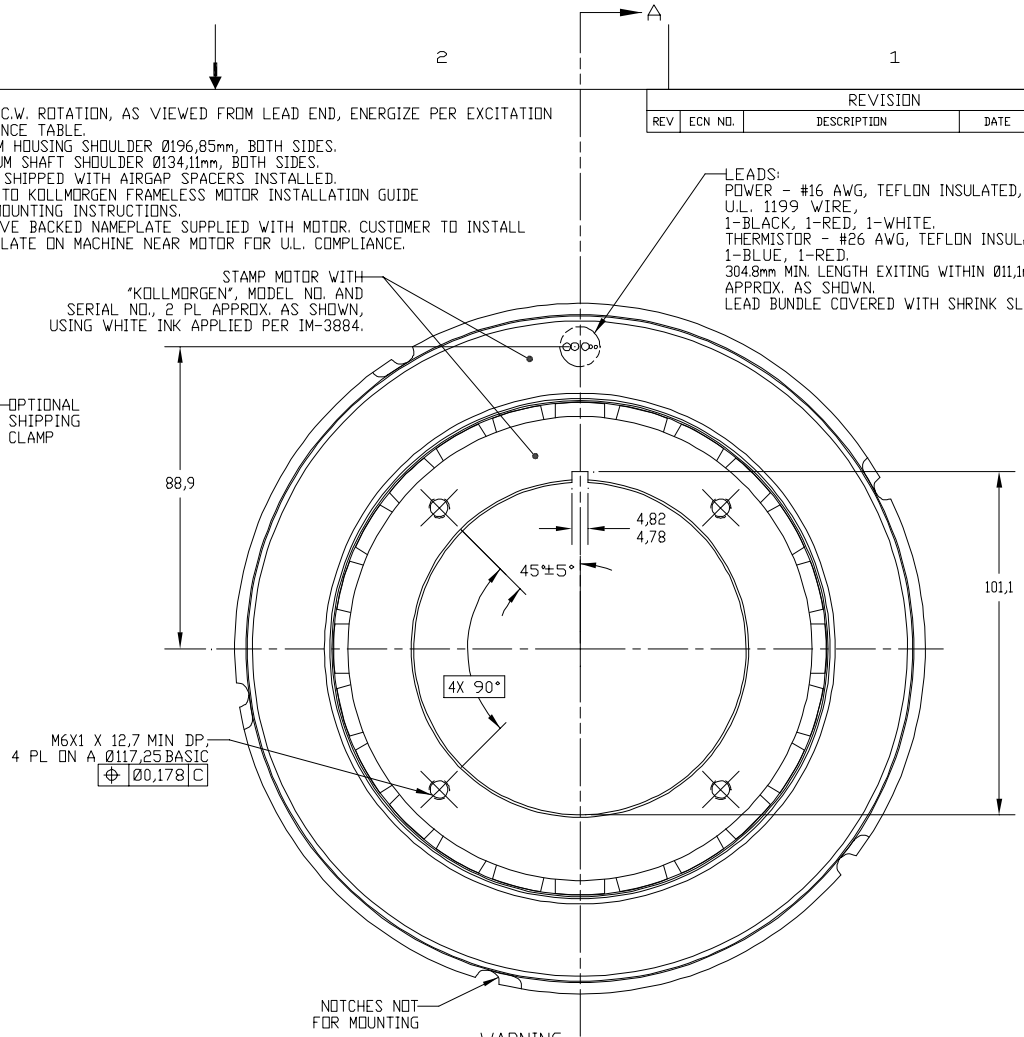

WARNING:
FIELD ASSEMBLY HAS HIGH ENERGY MAGNETS.
LEAVE AIRGAP SPACERS IN PLACE UNTIL MOTOR IS MOUNTED.
IF FIELD ASSEMBLY IS REMOVED FROM ARMATURE, USE EXTREME CAUTION WHEN HANDLING AND RE-ASSEMBLING.
PART DAMAGE AND BODILY INJURY MAY OCCUR.

	POWER CONNECTION		
STEP	PHASE "A" BLACK	PHASE "B" RED	PHASE "C" WHITE
1	⊕	⊖	
2	⊕		⊖
3		⊕	⊖
4	⊖	⊕	
5	⊖		⊕
6		⊖	⊕

EXCITATION SEQUENCE TABLE

TABLE 1

MODEL NUMBER	F/FH5708	F/FH5716	F/FH5732
DIM "A"	20,32 19,30	40,64 39,62	81,79 80,77
DIM "B"	25,4	45,72	86,36
FIELD ASSY	923319-08	923319-16	923319-32
ARMATURE ASSY (480 VAC)	C-920817-5708-X	C-920817-5716-X	C-920817-5732-X
ARMATURE ASSY (230 VAC)	C-920814-5708-X	C-920814-5716-X	C-920814-5732-X

ITEM	QTY	IDENTIFYING NO.	DESCRIPTION
2	1	SEE TABLE	ARMATURE ASSY, MACHINED
1	1	SEE TABLE	FIELD ASSY

LIST OF PARTS

Pro/Engineer Drawing	
Pro/E Model File Rev	-
Pro/E Model File	DDR_08X_ARMATURE_FIELD
Pro/E Drawing Name	920807
Pro/E Model Type	ASSEM

UNLESS OTHERWISE SPECIFIED:
REMOVE ALL SHARP BURRS AND BREAK ALL SHARP EDGES
XX DECIMAL PLACES ±0,38
XXX DECIMAL PLACES ±0,127
ANGULAR DIMENSIONS ±1°

KOLLMORGEN
GOLDLINE DDR
RADFORD, VIRGINIA
1-800-77SERVO (1-800-777-3786)

OUTLINE
F/FH57XX

DO NOT SCALE DRAWING
USE DIMENSIONS ONLY
ALL DIMENSIONS ARE IN MM

INTERPRET GEOMETRIC SYMBOLS PER ANSI Y14.5M-1982

DRAWN BY: KLR DATE: 05-Nov-01
CHECKED BY:
APPROVED BY:

FSCM	SIZE	DWG. NO.	REV
11384	C	920807 MM	A

SCALE: 1:1 JOB NO.: SHEET 1 OF 1

REV: A
DWG. NO. 920807